FOUNDATION GROUND PLAN (1:20)

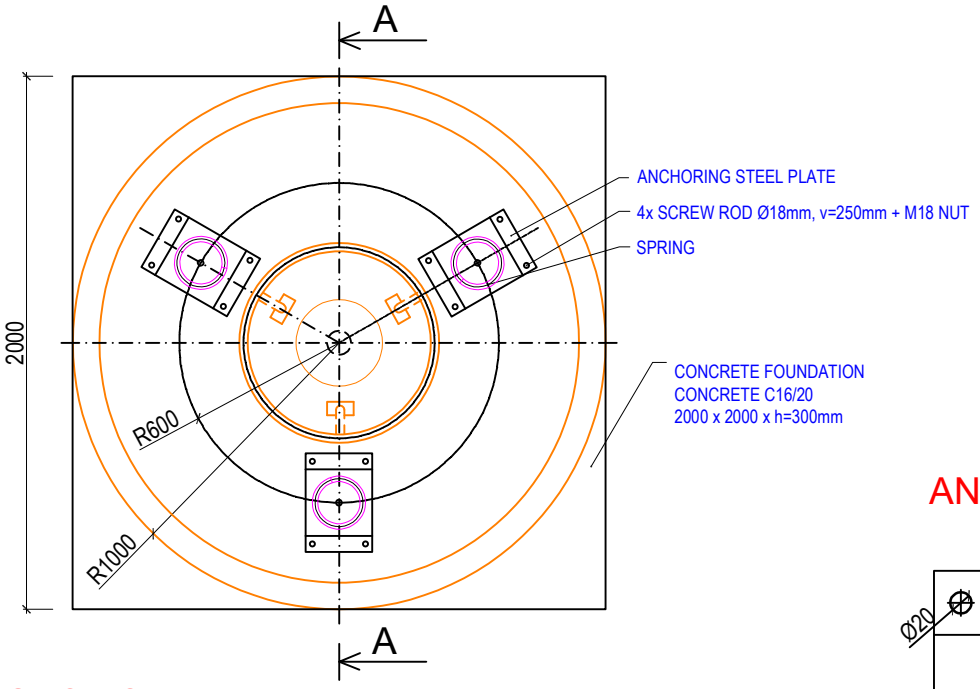

ANCHORING DETAIL (1:5)

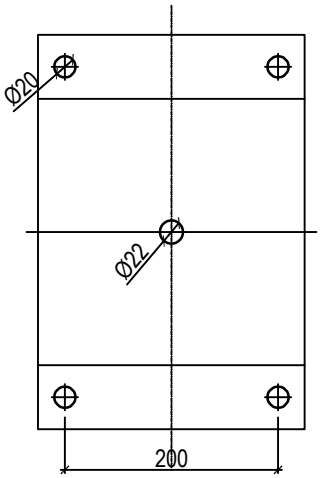

SECTION A-A (1:20)

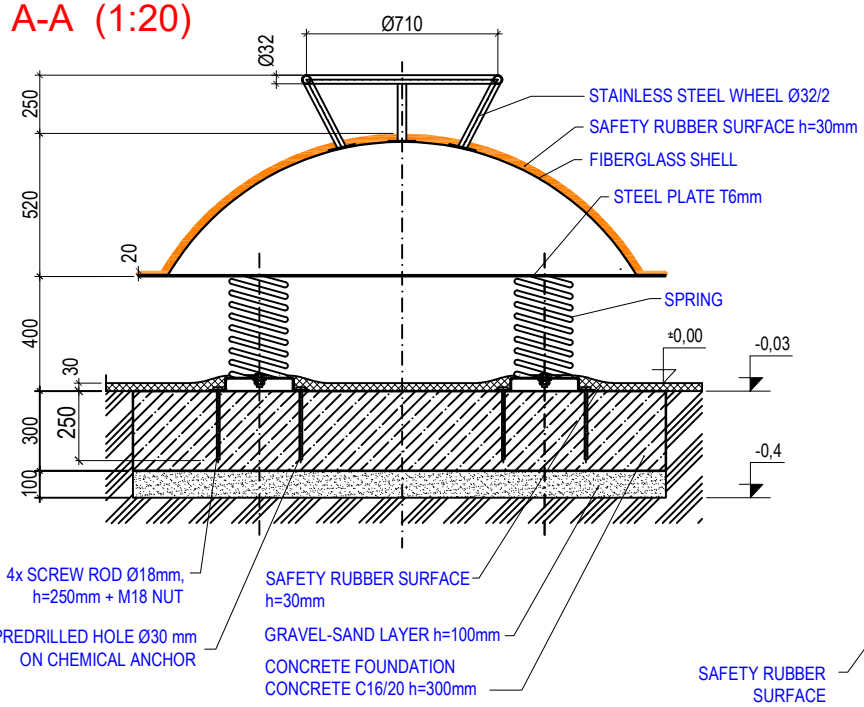

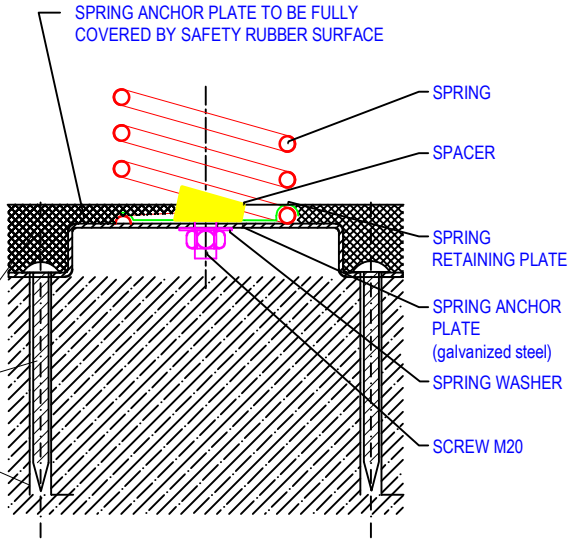

GAPS BETWEEN SPRING COILS MUST BE FITTED WITH SUPPLIED PROTECTIVE INSERT TO ELIMINATE ANY RISK OF FINGER ENTRAPMENT.

Author:		3D PROGRAM, s.r.o. Objízdná 1911 765 02 Otrokovice Tel: 602 500 045 Email: info@3dprogram.eu	
MgA. Maxmilián Blšták			
TECHNICAL DRAWING		Certified according to	EN71 , EN1176
		Date of issue	22.2.2021
E14 - HILL ON SPRINGS		M 1:20, M 1:5	format 1xA4
Foundation and anchoring - ground plan and section		E14_EN.dwg	revision 0